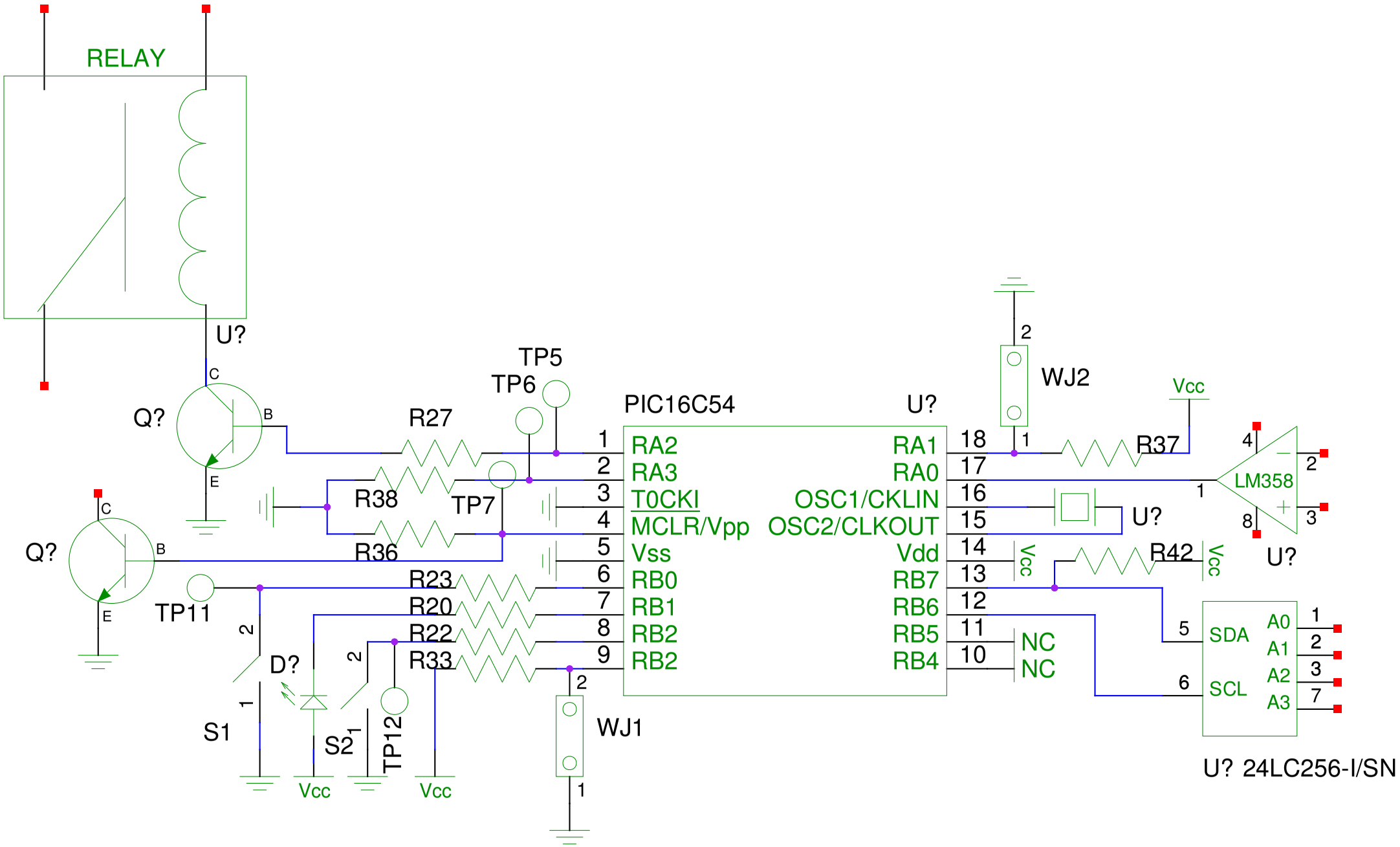
RELAY
U?
Q?
C
B
E
Q?
C
B
E
TP11
R27
R38
R36
TP7
TP5
TP6
R23
R20
R22
R33
D?
S1
S2
TP12
Vcc
Vcc
WJ1
PIC16C54
RA2
RA3
T0CKI
MCLR/Vpp
Vss
RB0
RB1
RB2
RB2
U?
RA1
RA0
OSC1/CKLIN
OSC2/CLKOUT
Vdd
RB7
RB6
RB5
RB4
NC
NC
WJ2
R37
Vcc
LM358
U?
U?
R42
Vcc
SDA
SCL
A0
A1
A2
A3
U? 24LC256-I/SN