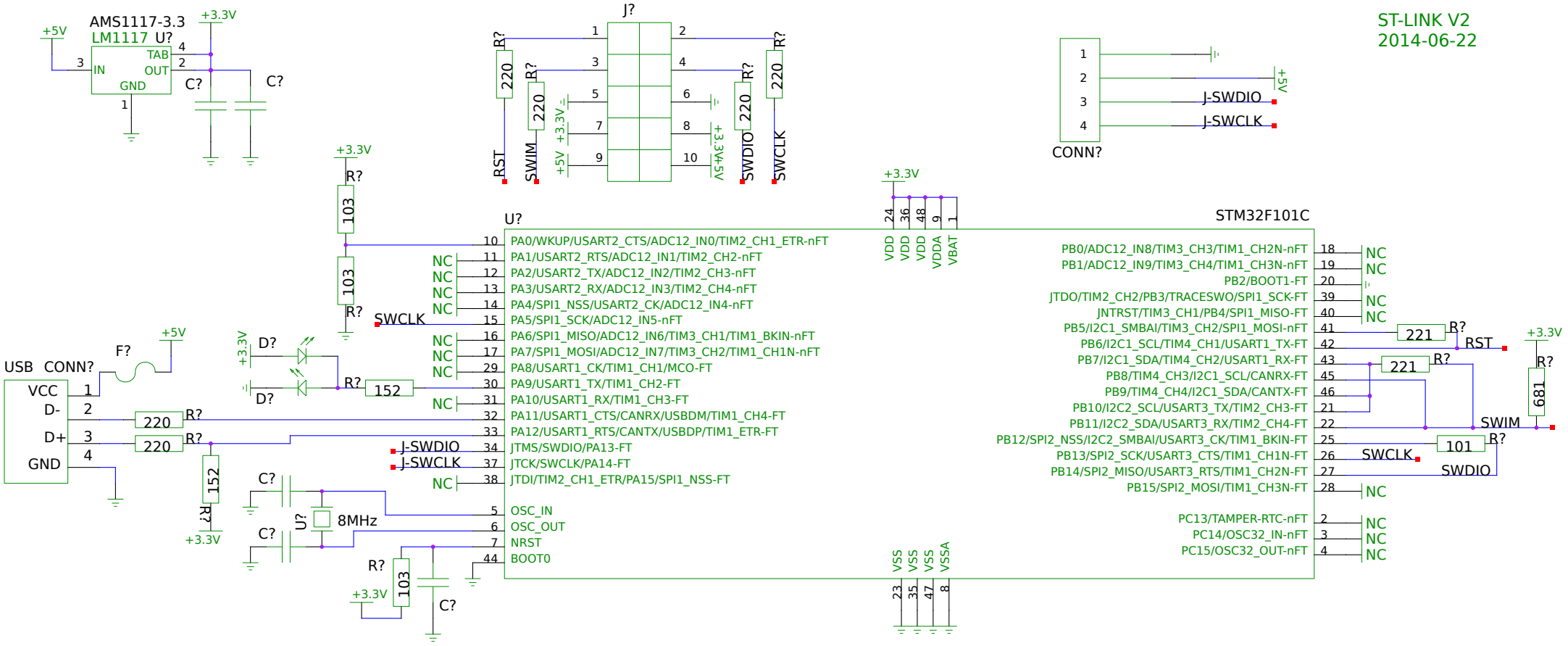
ST-LINK V2
2014-06-22
AMS1117-3.3
LM1117 U?
+5V
+3.3V
IN
OUT
TAB
GND
C?
J?
RST
SWIM
SWDIO
SWCLK
R?
220
103
152
221
101
681
CONN?
J-SWDIO
J-SWCLK
USB CONN?
VCC
D-
D+
GND
F?
D?
U?
8MHz
STM32F101C
PA0/WKUP/USART2_CTS/ADC12_IN0/TIM2_CH1_ETR-nFT
PA1/USART2_RTS/ADC12_IN1/TIM2_CH2-nFT
PA2/USART2_TX/ADC12_IN2/TIM2_CH3-nFT
PA3/USART2_RX/ADC12_IN3/TIM2_CH4-nFT
PA4/SPI1_NSS/USART2_CK/ADC12_IN4-nFT
PA5/SPI1_SCK/ADC12_IN5-nFT
PA6/SPI1_MISO/ADC12_IN6/TIM3_CH1/TIM1_BKIN-nFT
PA7/SPI1_MOSI/ADC12_IN7/TIM3_CH2/TIM1_CH1N-nFT
PA8/USART1_CK/TIM1_CH1/MCO-FT
PA9/USART1_TX/TIM1_CH2-FT
PA10/USART1_RX/TIM1_CH3-FT
PA11/USART1_CTS/CANRX/USBDM/TIM1_CH4-FT
PA12/USART1_RTS/CANTX/USBDP/TIM1_ETR-FT
JTMS/SWDIO/PA13-FT
JTCK/SWCLK/PA14-FT
JTDI/TIM2_CH1_ETR/PA15/SPI1_NSS-FT
OSC_IN
OSC_OUT
NRST
BOOT0
VDD
VDDA
VBAT
VSS
VSSA
PB0/ADC12_IN8/TIM3_CH3/TIM1_CH2N-nFT
PB1/ADC12_IN9/TIM3_CH4/TIM1_CH3N-nFT
PB2/BOOT1-FT
JTDO/TIM2_CH2/PB3/TRACESWO/SPI1_SCK-FT
JNTRST/TIM3_CH1/PB4/SPI1_MISO-FT
PB5/I2C1_SMBAI/TIM3_CH2/SPI1_MOSI-nFT
PB6/I2C1_SCL/TIM4_CH1/USART1_TX-FT
PB7/I2C1_SDA/TIM4_CH2/USART1_RX-FT
PB8/TIM4_CH3/I2C1_SCL/CANRX-FT
PB9/TIM4_CH4/I2C1_SDA/CANTX-FT
PB10/I2C2_SCL/USART3_TX/TIM2_CH3-FT
PB11/I2C2_SDA/USART3_RX/TIM2_CH4-FT
PB12/SPI2_NSS/I2C2_SMBAI/USART3_CK/TIM1_BKIN-FT
PB13/SPI2_SCK/USART3_CTS/TIM1_CH1N-FT
PB14/SPI2_MISO/USART3_RTS/TIM1_CH2N-FT
PB15/SPI2_MOSI/TIM1_CH3N-FT
PC13/TAMPER-RTC-nFT
PC14/OSC32_IN-nFT
PC15/OSC32_OUT-nFT
NC
SWCLK
SWDIO
SWIM
RST